MIC210

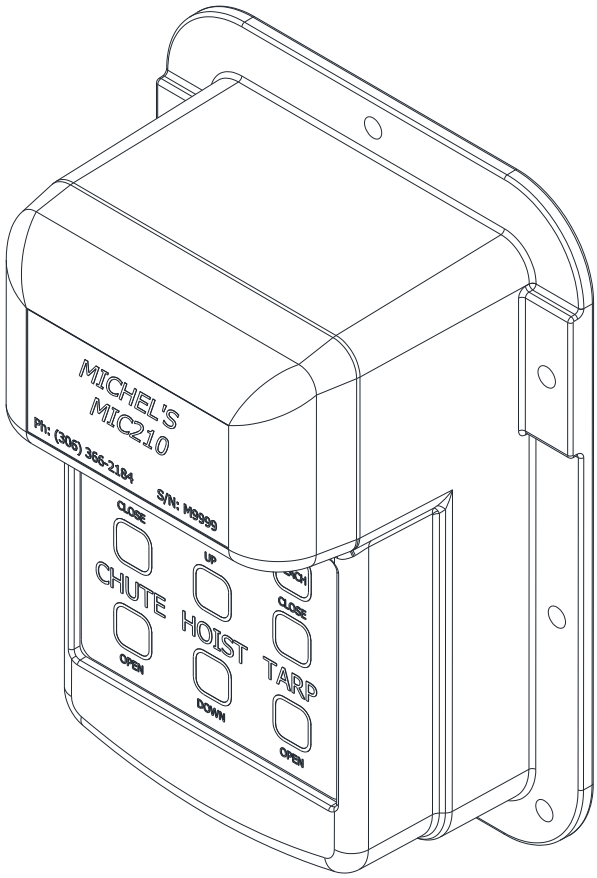

Please Forward to End User

For user operation refer to the R200 remote manual.

MIC210 Wireless Integrated Control System Installation Instructions

Contents

1.0 MIC210 Control Box Installation

Depending on the grain box, two different mounting brackets may be used. If the grain box already has a large 'U'-shaped bracket which houses air controls, use the basic plate. If not equipped with this 'U' –shaped bracket then the shielded bracket which mounts to the back side of the mud flap bracket should be used. The MIC210 Control Box mounting plate will be mounted to the box using the 3/8" bolts provided. Wire in the power wire and the electric tarp motor wires (if applicable) before securing the MIC210 Control Box to the mounting plate.

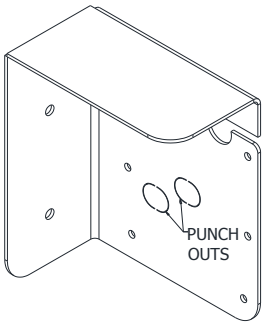

Shielded Mud Flap Bracket Mount

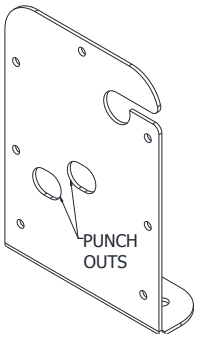

Basic Plate

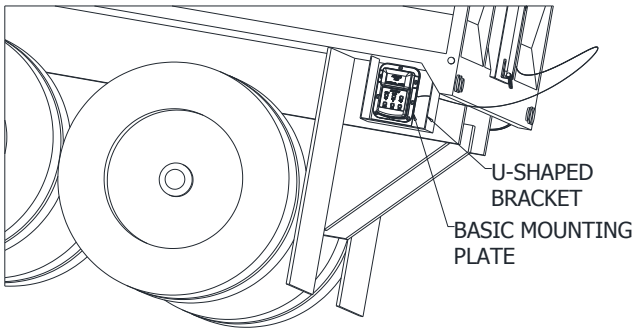

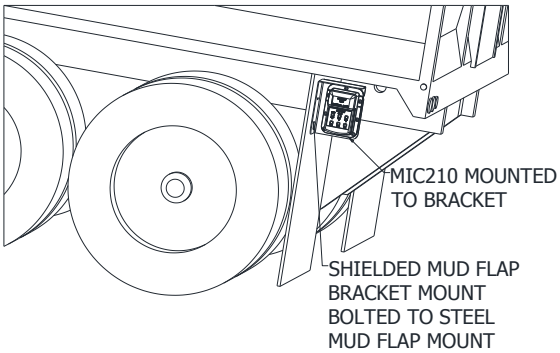

1.1 Connecting Power to the MIC210 Wireless Integrated Control System

There are two options which may be used to provide power to the MIC210 control box depending on whether or not the grain truck is equipped with an electric tarp.

1.1.1 Wiring the MIC210 System on a Grain Truck equipped with an Electric Tarp, Please refer to Additional Hardware Installation Instructions before Proceeding

Run 6 AWG wire from the battery underneath the truck, along the frame to the MIC210 control box. Make sure the inline circuit breaker is connected to the positive wire near the battery. Once the wires are installed and secured to the truck, thread the wires through the appropriate hole (described below) of the mounting plate coming in from behind the plate. Remove the punch outs with a chisel and hammer. Place a grommet in each of the slots to protect the wires. Next run the electric tarp motor wire down the side of the truck box underneath the truck through the holes in the frame and over to the MIC210 Control Box. These motor wires thread through the middle hole on the mounting plate. The incoming power wires thread through the bottom hole of the bracket. Make sure the grommets have

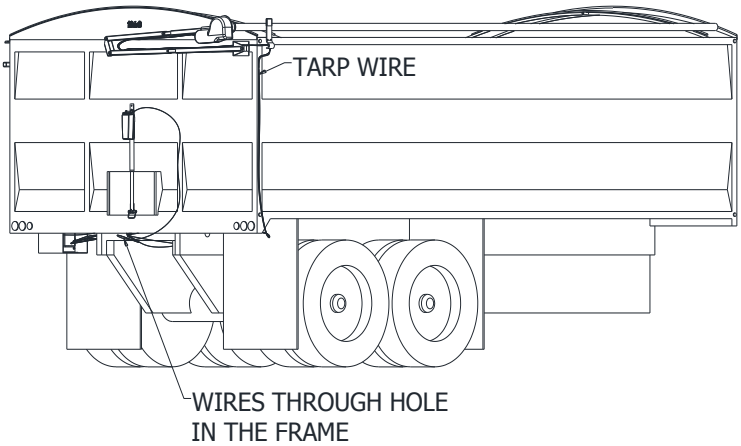

been installed to protect the wire. Also, ensure the rubber gasket is on the bracket. This seal does not need to be perfectly positioned at this point; it just needs to be in place so that the wires go through it before they are connected. The third hole at the top of the bracket is for the hoist and the Power Pro leads. Slide them into the top hole using the slot. The third grommet will need to be split using a pair of side cutters or a knife. Wrap the split grommet around the actuator and hoist leads. Then insert it into the top hole. Next, connect the power wires to the solenoid. The positive wire goes on the positive post (top left) of the solenoid. The negative wire goes on the negative post (top right) of the solenoid. Then, connect the tarp motor wires to the solenoid. These wires connect to the remaining bottom posts on the solenoid. It does not matter which wire goes where on these two posts. If they end up being backwards to the remote there is a very simple setting in the remote which can reverse them without having to physically switch the wires. Please see the R200 Remote instruction manual, Section 4.2.2. **There is a specific way in which the 6 AWG wires must be positioned in order to fit inside the MIC210 Control Box**. Please refer to the Diagram. Once all the wires are connected to the MIC210 box connect the wires to the battery to ensure everything works before carrying on to securing the box to the mounting plate.

Securing MIC210 Control box to Mounting Plate

Start by mounting the control box and gasket to the mounting plate by using the bottom two holes in the control box, this will aid in holding everything in place before you install the back cover. Next make sure your wires are still remaining in the correct positions according to the diagram to refrain from pinching anything, install the back protective cover using the remaining five holes in the control box.

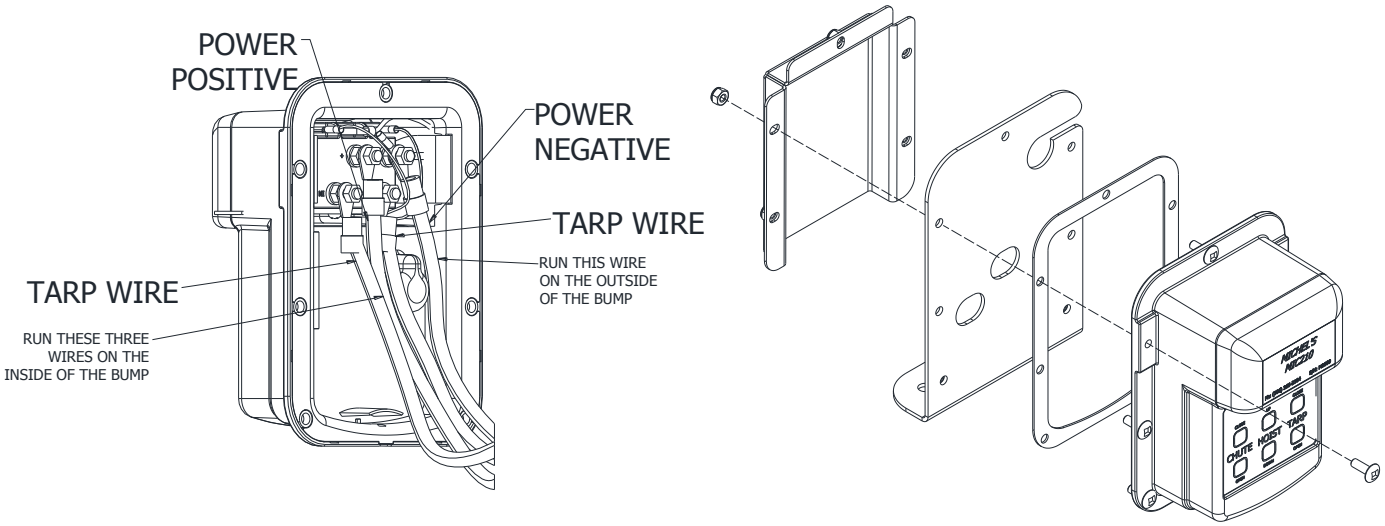

1.1.2 Wiring the MIC210 System on a grain truck NOT equipped with an electric tarp

Run the 14 AWG 2-wire cord from the battery to the receiver box. Thread the cord through the middle hole of the mounting plate. Connect the positive wire to the top left post and the negative to the top right post of the solenoid located at the back of the MIC210 Control Box.

Now partially secure the MIC210 Control Box to the mounting plate using the Robertson pan head bolts and nuts. The excess wire will need to be pulled through the bracket as the MIC210 Control Box is being mounted to the mounting plate. The hoist and actuator wires will go through the top of the mounting bracket. Ensure the rubber grommet stays in place. Then bolt the MIC210 Control Box to the mounting plate along with the gasket with just the bottom two bolts.

Once everything is installed and tested, we recommend applying silicon around the wires to seal them to the grommets. Finish securing the MIC210 to the mounting bracket along with the back cover. If the mounting bracket is not secured to the truck do so now.

To teach the remote to the MIC210, see section 8.0.0 in the R200 remote manual.

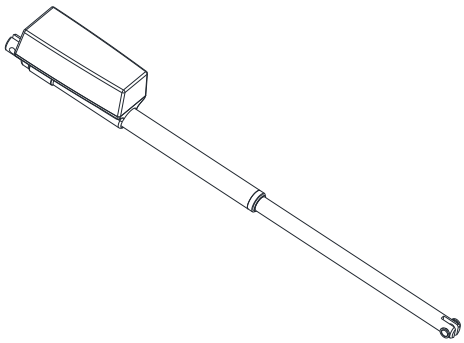

2.0 MIC210 Power Pro Opener Installation

2.1 Mounting the Power Pro on Truck Gate with Mounting Tabs

Before mounting the Power Pro Opener to the end gate, it is best to determine the correct location for installing the mounting brackets. Plug the Power Pro Opener into the control box. Press either the open button or the close button, whichever one extends the Power Pro Opener. Fully extend the Power Pro to the point where the rod just starts to turn rapidly but will not extend any more. Turn the rod by hand in the counter clockwise direction and note there will be resistance unlike in the clockwise direction. Once there is resistance, turn the rod clockwise a half of a turn. This will adjust the extended length of the actuator ensuring the gate will close all the way.
Ensure the grain chute opens and closes freely by hand. Secure the mounting tabs to the actuator with the two 3/8” quick pins. Position the mounting brackets so they are

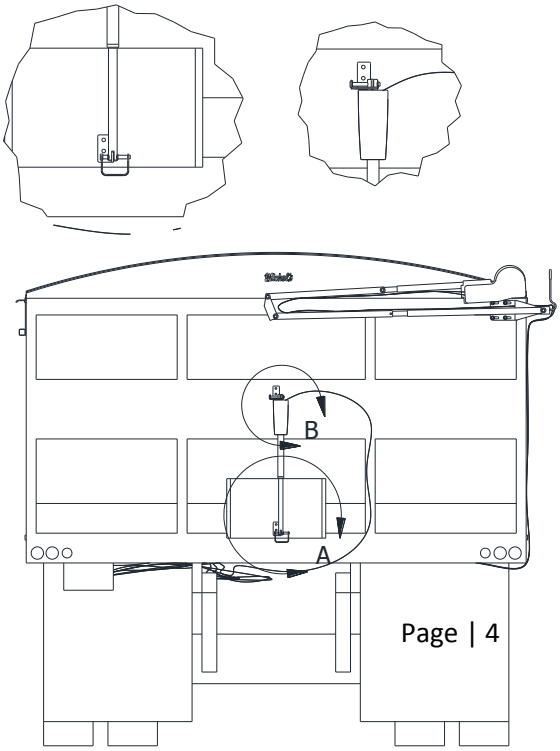

centered with the chute. Place the rod end near the bottom of the chute gate. Place the top one in line with the bottom one. Mark your holes or brackets. **Ensure that the Power Pro opener is mounted free of any obstructions.**

Weld or drill/bolt the mounting brackets in position on the vertical center-line of the grain chute and box end panel at the positions determined in the steps above. Note: If the bracket to the chute gate is bolted rather than welded, the chute gate may be limited from opening all the way.

Attach the Power Pro Opener main body to the top mounting bracket using the supplied quick pin.

Attach the Power Pro Opener rod to the chute gate with the supplied quick pin. Secure all wires using the cable ties and wire clips provided.

Once the MIC210 Control Box, the hoist control and the Power Pro are all installed and tested, it is recommended to apply silicon around the wires and the grommets. Then finish securing the MIC210 to the mounting bracket along with the back cover. If the mounting bracket is not secured to the truck do so now.

NOTE: The existing lift handle on the end gate does not need to be removed. However, it must not be able to lock in any position. Allowing it to lock could cause the Power Pro Opener to stall resulting in possible damage to the Power Pro Opener or truck.

2.2 Mounting the Power Pro on Truck Gate with a Long and Narrow Lever Handle

Trucks that have a long and narrow lever style bracket for lifting and lowering the gate will need to have this bracket modified in order to have the actuator fit into the bracket. There are two parts to this lever bracket. In the top portion a notch will have to be cut out of the top of the bracket so that the actuator does not interfere with the bracket's motion. There will also be a hole that needs to be drilled in the bottom bracket.

Start with cutting the notch out of the top bracket. The recommended size for the notch is 3 inches deep and 1-1/4 inch wide at the bottom of the notch and 1-1/2 inch in from the outside edges at the top of the bracket. These dimensions are guidelines; the notch size may need to be adjusted based on each individual truck.

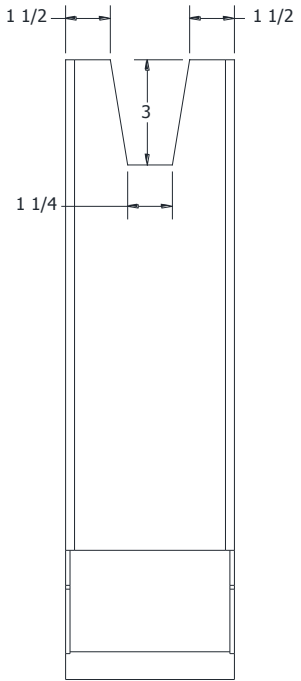

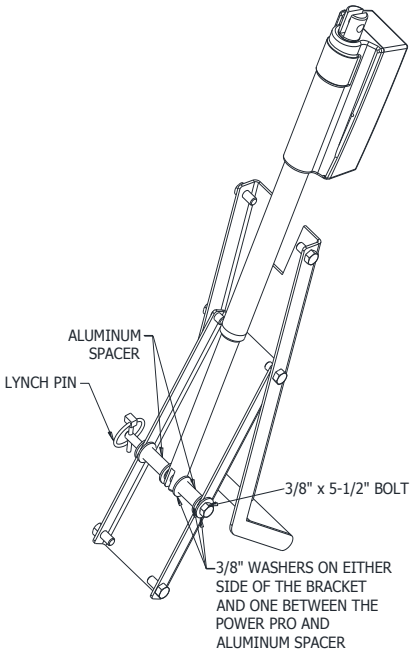

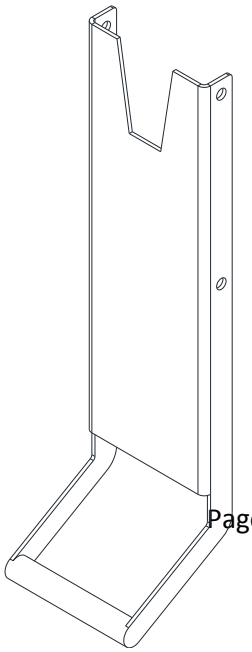

Drill 3/8” diameter holes in the lower brackets 4-3/4” up from the bottom of the bracket and 1/2” inch from the back of the bottom bracket.

Slide the actuator in behind the gate lever through the notch and down to the holes which were drilled in the previous step. Slide the bolt through the holes and add in the washers and spacers as the bolt is slid in through the holes in the bracket and the actuator mounting holes. Once all of the washers and spacers are in place and the bolt is all the way through. Insert the lynch pin into the hole which had been drilled in the bolt.

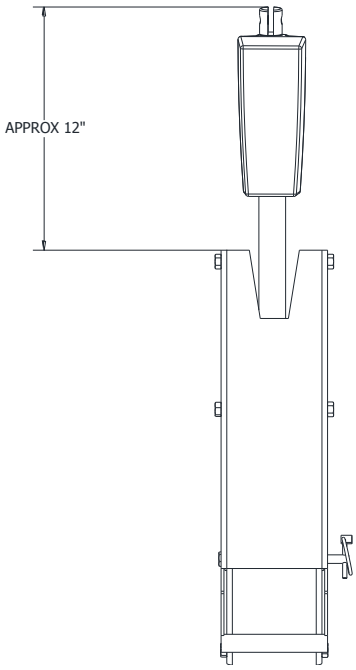

Connect the power to the actuator and extend the actuator until it begins to spin rapidly. **STOP IMMEDIATELY AFTER THE POWER PRO STARTS TURNING.** Retract the actuator a small amount (1/4” or slightly less). Use this length to determine the appropriate position to weld or bolt the top actuator mounting tab in place. It should be roughly 12” from the top of the top section of the lever handle. Insert the quick pin through the hole in the bolt.

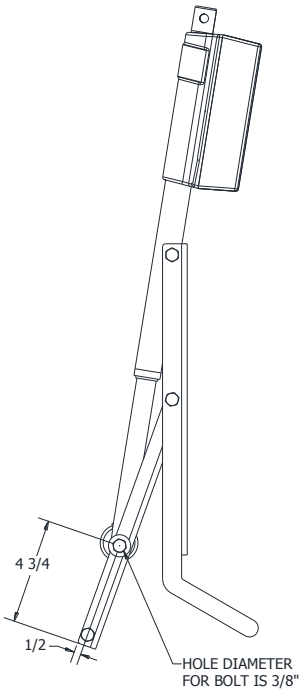

Power Pro installed on a truck body with wide lift handle (handle can be left on if desired but should not be able to lock or else damage to the Power Pro or truck may occur):

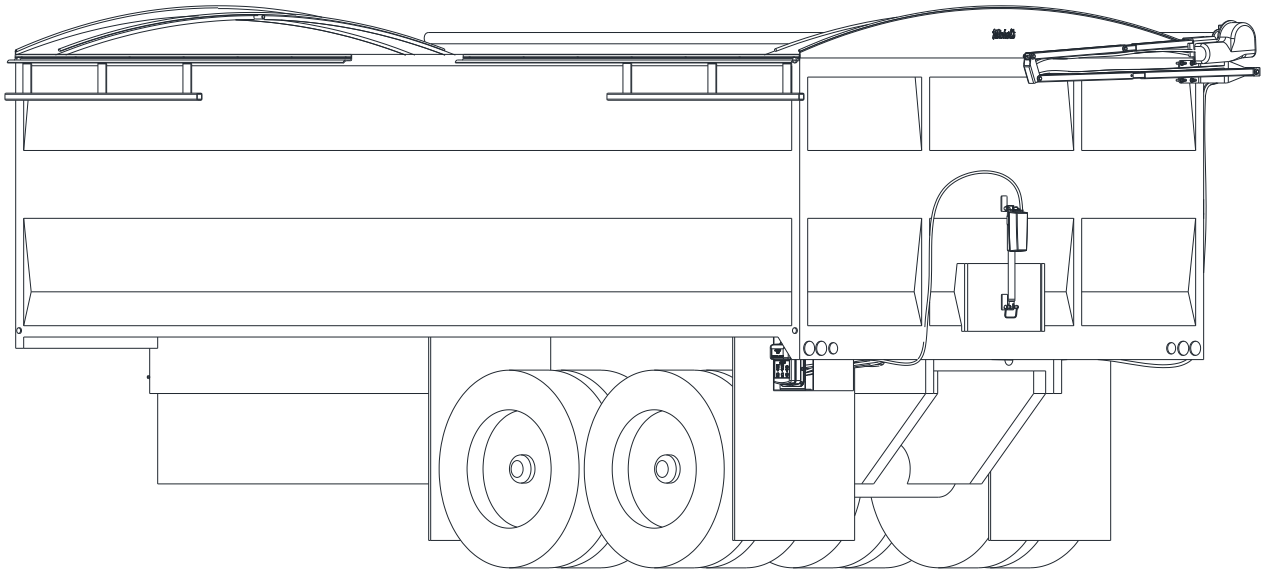

<u>Power Pro installed on a truck body with long and narrow lift handle:</u>

3.0 MIC210 Hoist Control Installation

Mount the MIC210 Hoist Control Air Valve on the chassis of the truck near the air supply line and near the back of the grain box to minimize wiring length. Use the hoist extension cord to connect the air valve to the MIC210 box. Run the wire underneath the truck and secure it using wire clips and cable ties. All of the fittings on this MIC210 Hoist Control Air Valve are for 1/4” airline.

3.1 Air Controlled Hoist Air Valve Installation

Install the supplied ¼” airline tee into the supply line and connect it to the input of the air-valve (Port 1 on the diagram). The air valve input will have an inline filter threaded to it. It is important to have this inline filter in place to keep contaminants out of the valve spool.

There will also be shuttle valves with 1/4” airline adapter fittings pre-assembled and included in the kit. Install one into each of the air cylinder lines which raise and lower the hoist. Connect the air-lines to the

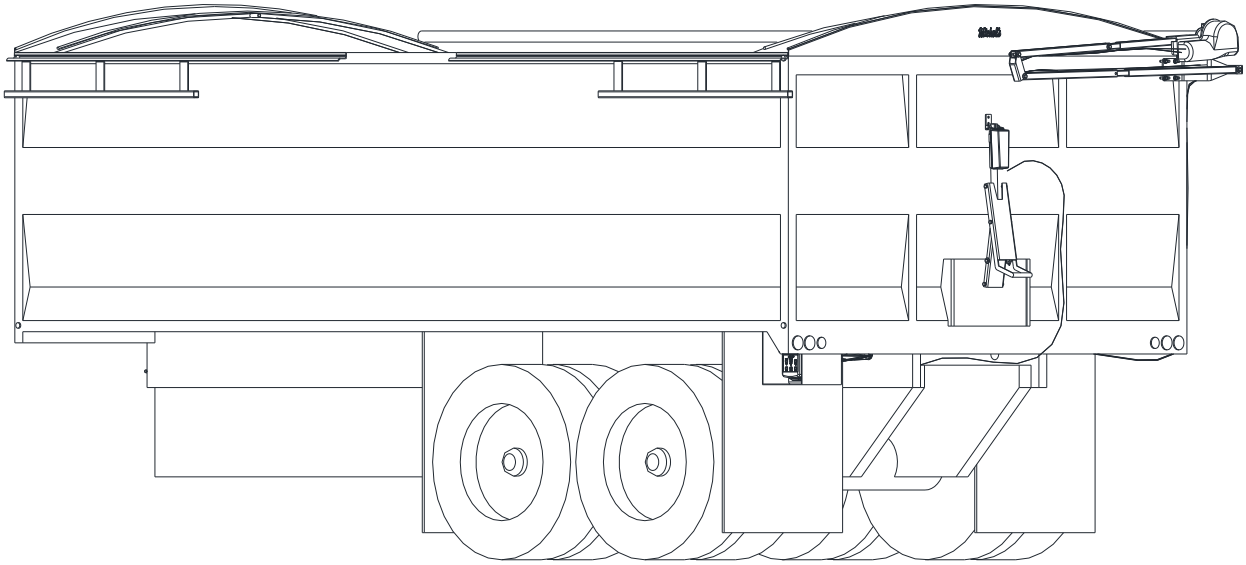

outlets on the air valve. On the diagram one of the lines should go to Port 2 and the other to Port 4. If the grain body raises and lowers backwards to the remote and MIC210 Control Box (for example ‘UP’ is lowering and ‘DOWN’ is lifting) use the settings in the remote to reverse them, it is not necessary to physically switch lines. Please refer to the R200 Remote Control instruction manual, section 8.3.2.2. Install the shuttle valves as shown such that the shuttle operates between the existing air valve and the solenoid operated air valve.

There will be a three wire extension cord included with the MIC210. Plug the air valve into the female end of this cord then run the cord underneath the truck using wire clips to secure the wire to the truck. Run this wire through the hole in the frame with the other wires and lines and connect it to the MIC210 Main Control Box.

NOTE: The fittings supplied are all push-to-connect. They do not require ferrules and can be disconnected by depressing the release collar and pulling the airline away.

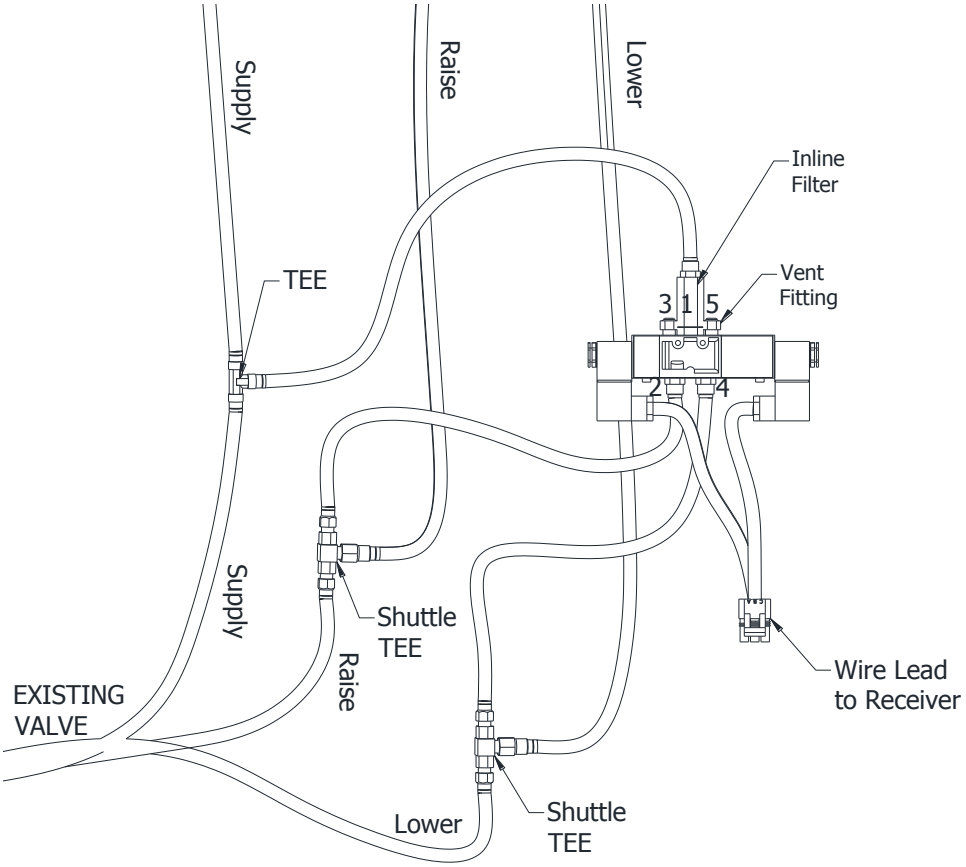

3.2 Electrically Controlled Hoist Electric Control Installation

If the truck uses electricity to control the hoist solenoid instead of air, an Electric Hoist Control Box will be included. Follow these instructions to install the Electric Hoist Control Box. Using the supplied 3/4" Robertson self-tapping screw, mount the control box on the chassis of the truck in a convenient spot so that the wires can reach both the MIC210 main control box and the point on the electric hoist control where the MIC210 Electric Hoist Control Box will splice into. Pick a point near the rocker switch, toggle switch or push buttons depending on which system is used on the truck to splice into the existing system. Run the cord with the bare wires over to the splice point with the existing electric hoist control wires. Cut off excess cord. Strip some of the outer layer of insulation off of the end of the cord. Strip the ends of each of the wires which were inside of the cord. Then splice the wires into the existing electric hoist control at the toggle switch, rocker switch, or push buttons. The wires inside of the cord are white, black and green. The colour scheme of the truck wires may be different. On the MIC210

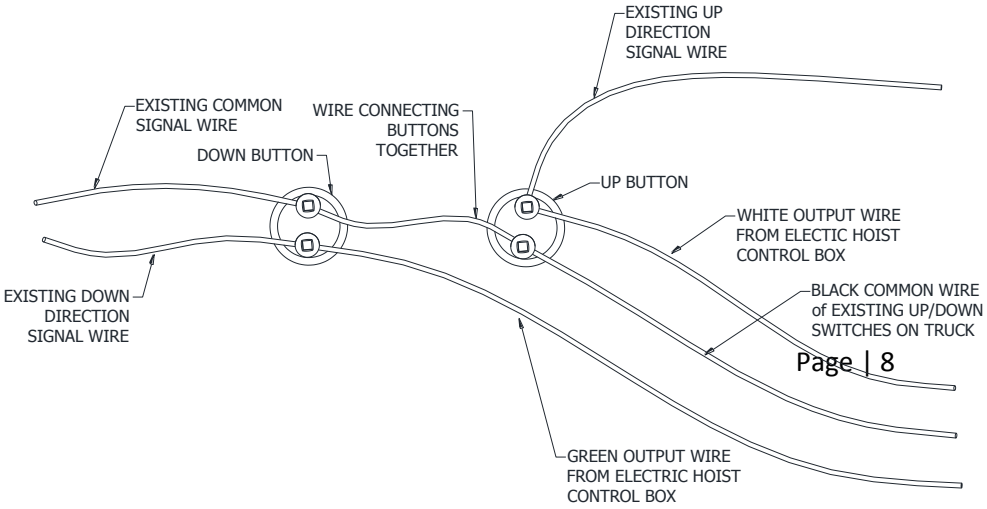

electric hoist control box, the black wire is the common wire for the up/down switches on the truck. The polarity of this black wire will depend on the polarity which activates the solenoid on the truck. **This black wire is <u>not necessarily</u> a ground (negative) wire**. The white and the green wire each activate one of the directions. **Note:** If the white and the green wires are connected backwards so that the 'UP' buttons lower the truck box and the 'DOWN' buttons lift the truck box, use the remote settings to reverse them. It is not necessary to switch the wires, see Section 8.3.2.2 of the R200 Remote manual. Run the cord with the three wire weather pack on it, along the frame rail and to the MIC210 main control box. Plug the 3-wire Weather Pack into the MIC210 Main Control Box.

<u>Electric Hoist Control Box Diagram:</u>

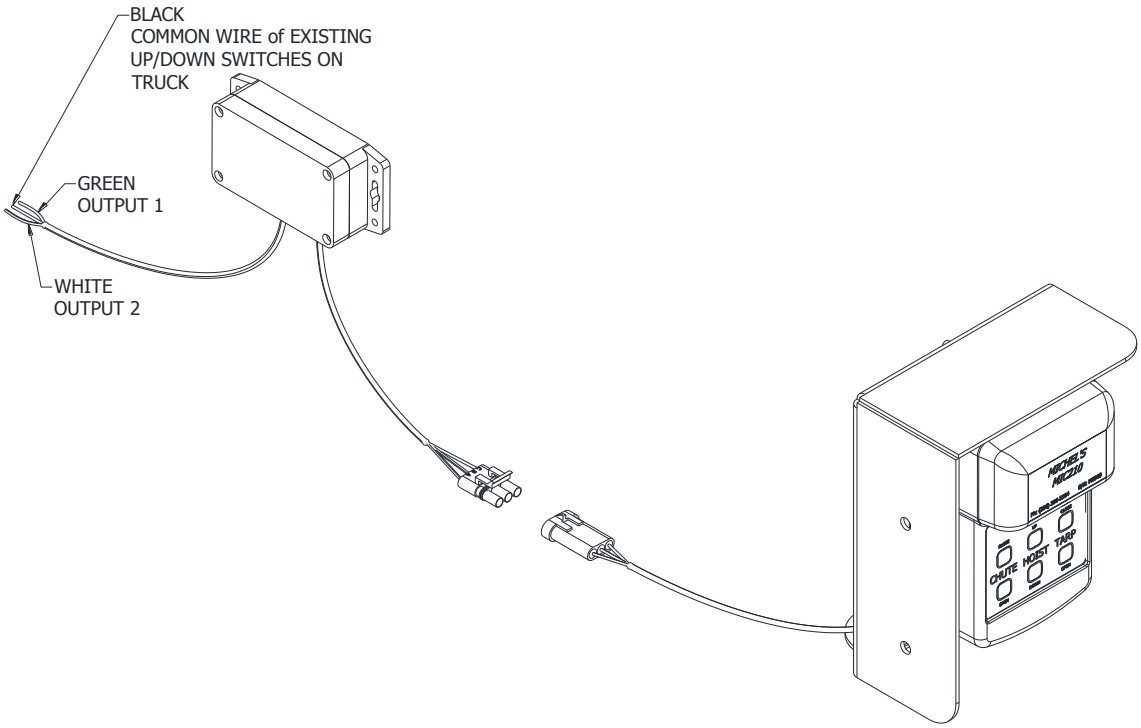

3.3 Special Case: Wiring the MIC210 System For a Truck Already Equipped with an Electric Tarp Controlled with Switch in the Cab.

If the truck that the MIC210 system is being installed on is already equipped with an electric tarp controlled by a manual rocker switch, there will be some modifications to the wiring required. The MIC210 system has a solenoid installed on it which is used to open and close the tarp. Therefore, in order to properly run the tarp the existing solenoid will need to be bypassed. First disconnect the existing tarp system from the battery. Remove the wires from the motor output posts on the existing solenoid and connect them to the the positive and negative posts of the existing solenoid. Make sure that both wires on the positive post and both wires on the negative post are of the same color. Cut the wire that goes between the pre-existing solenoid and the tarp somewhere near the back of the truck. Ensure that there will be enough wire to reach the positive and the negative posts of the solenoid on the MIC210. Attach #6 1/4" DIA ring terminals to the ends of the wire that was cut and install these wires on the solenoid of the MIC210. Connect these ring terminals to the positive and negative terminals of the MIC210 solenoid. There should now be a wire going from the pre-existing solenoid to the MIC210 solenoid. There will be about 10 ft of 6 AWG wire included. Use this wire to connect the motor output posts on the MIC210 solenoid and then splice it to the wires that go to the tarp motor. Reconnect the MIC210 system to the battery.

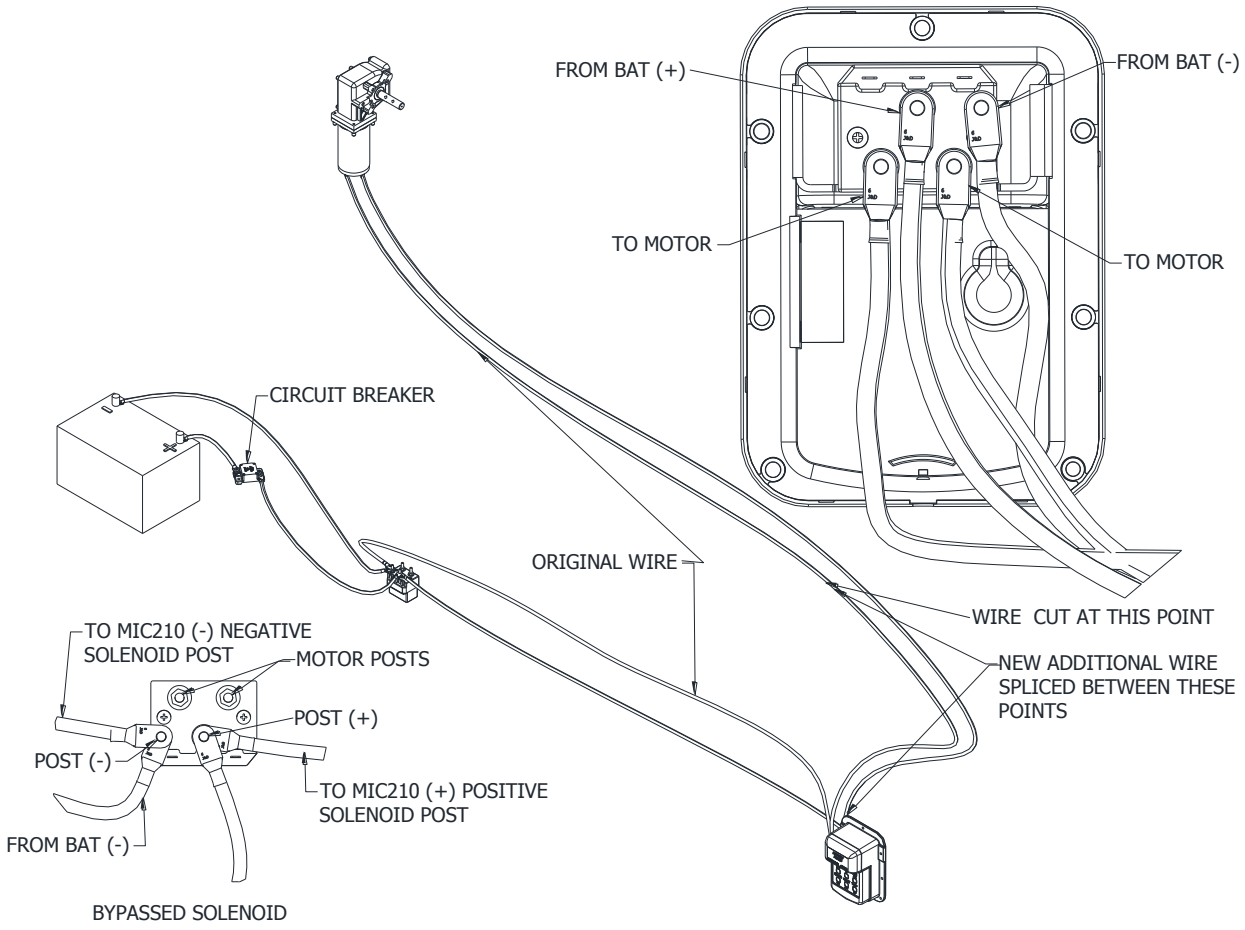

4.0 Tarp Override Switch Options

4.1 MIC210 Control Box with Tarp Override Switch Style #1

The MIC210 Control Box can be ordered ready to connect to a toggle switch, a rocker switch, or push buttons inside of the cab of the grain truck. The first style comes with a short length of wire crimped to both control wires on the solenoid with male quick disconnect wire ends crimped onto it. The first step in splicing the toggle switch, rocker switch, or push buttons from the cab into the MIC210 control box would be to disconnect the control wires from the existing system and bypass the existing solenoid with the heavy wire (See Special Case in Section 3.3 for further details). If there is no pre-existing tarp control system installed, this step can be skipped and the new wire can be installed and run back to the MIC210 control box. Once the new control wires have been installed or the pre-existing control wires have been repositioned to the MIC210 Control box crimp on 1/4" female quick disconnects to the control wires and a 1/4" ring terminal to the common wire on the toggle switch, rocker switch, or push buttons. Usually the colour scheme for these control wires is white, green, and black where the white wire and the green wire are the control wires and the black wire is the common wire on the toggle switch, rocker switch, or push buttons. **The colour scheme on pre-existing control wires may be different!** Plug the white control wire from the switch to the white wire lead from the MIC210 Control Box solenoid. Plug the green control wire to the green wire lead from the MIC210 Control Box solenoid. Then connect the common wire on the the toggle switch, rocker switch, or push buttons with the ring terminal to the **ground (negative)** post of the solenoid.

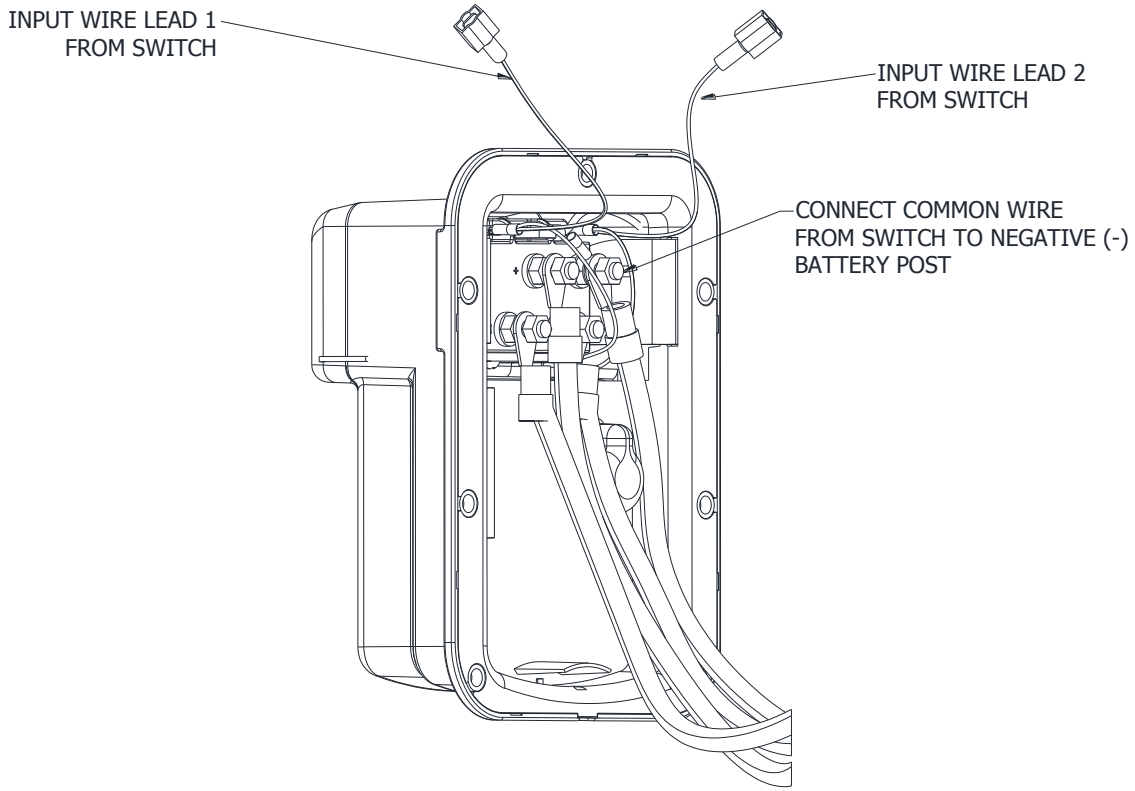

4.2 MIC210 Control Box with Tarp Override Switch Style #2

The second option for connecting the MIC210 Control box to the toggle switch, rocker switch, or push buttons from the cab would be to use the wire lead with a WeatherPack end on it from the MIC210 Control Box. The toggle switch, rocker switch, or push buttons inside of the cab of the grain truck should be connected with an 18 Gauge three wire cord which consists of a green wire, a white wire, and a black wire. The white and the green wire inside of the three wire cord can be connected one on each side of the toggle switch or rocker switch or in the case of push buttons one on each button. The black wire is the common wire on the toggle switch or rocker switch or in the case of push buttons the black wire would be connected to the remaining wire on both buttons (after the white wire and the green wire have been connected). The black common wire **MUST** be ground (negative). If the polarity of this wire needs to be power (positive) a separate switchbox must be used or else damage to the main MIC210 control box will occur. See Section 4.3 for more details on this separate box. At the other end of the cord there should be a three wire female WeatherPack end. This is where the male three-wire weatherpack on the MIC210 Control Box will plug in to. Note: The protective plug over the male 3-wire WeatherPack on the MIC210 Control Box will have to be removed. Plug the male wire lead into the switch wire.

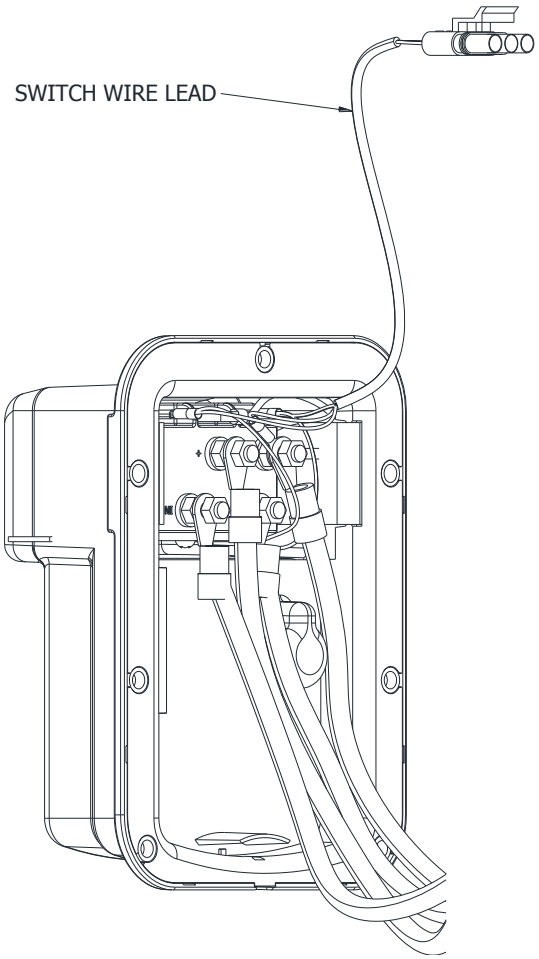

4.3 MIC210 Control Box with Tarp Override Switch Style #2 with Opposite Polarity Box

The MIC210 Control Box controls the tarp, chute, and hoist by switching the ground (negative) side of the circuit on and off. If the switch from the cab of the truck on which the MIC210 system is being installed turns the power (positive) on and off, a tarp circuit isolation box will need to be installed. This box allows the power (positive) switch inside of the cab of the grain truck to operate the MIC210 Control box without damaging it. If this isolation box is not in place or is bypassed on a power (positive) switched system damage **WILL** occur to the MIC210 control box. If there is any uncertainty about the polarity of the system, use the isolation box. Mount the box in a convienent spot on the chassis of the truck between the MIC210 Control Box and the splice point into the switch inside of the cab of the grain truck. The isolation box will have two cords coming out of the box. One cord will have three wires stripped bare. This cord goes to the switch, inside the cab of the truck. The white wire and the green wire inside of the three wire cord can be connected one on each side of the switch for open and close (see below). The black wire **MUST** be connected to a terminal with the opposite polarity of the switch. For example if the switch turns power (positive) on and off, the black wire must be connected to ground (negative). If the switch turns ground (negative) on and off, the black wire must be connected to power (positive). The other cord will have a female three wire WeatherPack connector on it. This is where the male 3-wire weatherpack on the MIC210 Control Box will plug in to. Note: The protective plug over the male 3-wire weatherPack on the MIC210 Control Box will have to be removed. Plug the male wire lead into the switch wire.

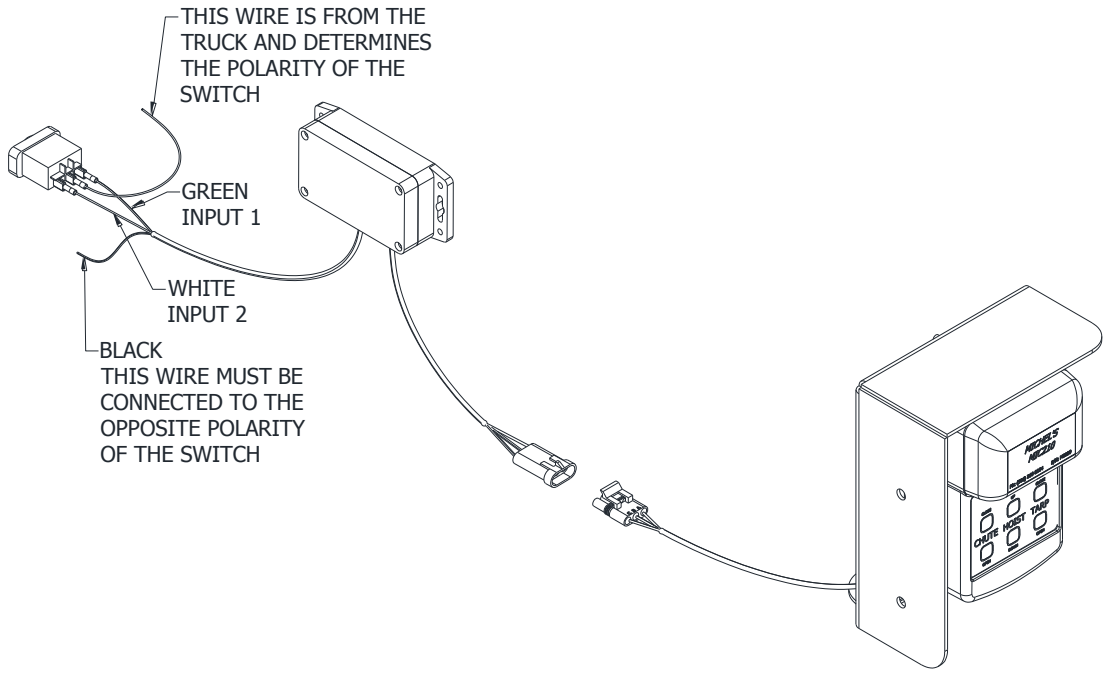

Optional Manual Override

Step 1: Remove the motor cover and disconnect the motor from the power supply.

Step 2: Remove the plastic cap covering the manual input shaft. **Do not use the manual override when the motor is running or the motor is connected to the power supply.**

Step 3: Using a 1/2in socket and a speed ratchet or impact driver, simply slide onto the manual input shaft and drive the gearbox as needed. Keep in mind that 90 revolutions of input will result in one revolution of output.

Step 4: Remove the driver and re-install the plastic cap.

5.0 Warranty

Michel's Industries warrants their products for a period of one year from date of purchase. Any parts returned to Michel's Industries LTD. will be shipped prepaid by the customer and will be returned F.O.B. St. Gregor, Sk. Canada. We will not assume responsibility for shipping, labor or travel expenses. Please Note: We reserve the right to make improvements; therefore specifications are subject to change without notice.

Note: If wiring is hooked up incorrectly it will void your warranty.

The enclosed device complies with Part 15 of the FCC Rules. Operation is subject to the following two conditions: (i.) this device may not cause harmful interference and (ii.) this device must accept any interference received, including interference that may cause undesired operation.

Contains FCC ID: MCQ-XB900HP

Contains IC: 1846A-XB900HP

NOTE: This equipment has been tested and found to comply with the limits for a Class A digital device, pursuant to part 15 of the FCC Rules. These limits are designed to provide reasonable protection against harmful interference when the equipment is operated in a commercial environment. This equipment generates, uses, and can radiate radio frequency energy and, if not installed and used in accordance with the instruction manual, may cause harmful interference to radio communications. Operation of this equipment in a residential area is likely to cause harmful interference in which case the user will be required to correct the interference at his own expense.

*****For Remote Operation and Programming functions refer to the R200 Remote Instruction Manual Section 8.0.0*****

Michel's Industries LTD.
P.O. Box 119
St. Gregor, SK S0K 3X0
CANADA
TEL: (306) 366-2184 FAX: (306) 366-2145
www.michels.ca