REAR ATTACHMENT ELECTRIC CONVERSION

FARM MODEL

INSTALLATION INSTRUCTIONS

This page intentionally left blank

PLEASE READ ENTIRE INSTRUCTIONS BEFORE BEGINNINGTHESE INSTRUCTIONS ARE FOR A STANDARD ROLLING TARP THAT LOCKS CLOSED ON THE DRIVER'S SIDE

Step 1: Remove Front Motor Attachment

Proceed to Step 2 if you do not have a Front Mounted Electric

Procedure: Roll the tarp to the open position. Take the motor cover off and remove the two wire leads from the motor and the pivot arm. Remove the wire from the underside of the box to the back of the box. Do not cut or discard at this time. Mark the large diameter side of the front beveled pulley and measure the distance from the front of the front hood. Loosen the set screws on the front beveled pulley. Slide the pulley back to expose the 5/16"x2-1/4" bolt and remove the bolt. Slide the top arm out of the roll-tube and off the bottom arm. Remove the 3/8"x1-3/4" bolt from the bottom pivot arm to remove arm from box. Remove the motor from the bracket by removing three 5/16" x 3/4" bolts. Cut the roll-tube off 1/4" shorter than the mark that was made from the front beveled pulley. Slide the beveled pulley back to the original position and install the supplied plastic cap into the beveled pulley. Remove the 1/4" x 1" lag screws and the pivot arm guide from the front of the box.

Step 2: Roll-tube Preparation

Procedure: Remove rear pulley from the roll-tube. Cut the spline (3) off of the rear of the roll-tube (2) no more than 1" behind the box. If enough material isn't removed the motor shaft will interfere with the crimp in the roll-tube extension. Install supplied 12" roll-tube extension (1) into the rear of the roll-tube where the spline was. Grind the weld smooth so the rear pulley can slide back into the correct location. Shorten the roll-tube so it stick past the rear of the box 9".

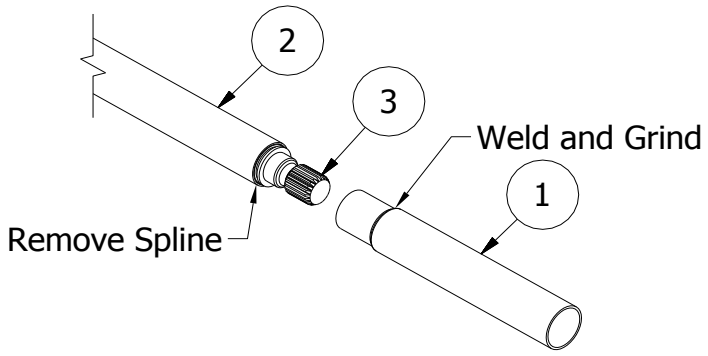

Step 3: Rear Attachment Arm Mounting Installation

Procedure: Mount the offset bracket flush with the tarp stop and at the bottom of the rear header. Drill 11/32" holes and mount with 3/8" self-taping bolts. Assemble the bottom arm by sliding the adjusting arm onto the bottom arm making sure that the holes are the same orientation. Set the length from pivot hole center to pivot hole center using the following starting calculation: Width of Box/2 + the offset of the tarp stop plus 4". Note: The Standard Tarp Stop will not have an offset. Tighten the 3/8" bolt in the arm to temporary clamp the arm into place. Mount the motor (B) to the electric bracket (C) with 5/16"x3/4" hex bolts and lock washers. Slide the other adjustable arm onto the motor arm making sure that the holes are orientated correctly. Measure the length from the center of the motor shaft to the pivot hole center using the following calculation: Width of Box/2 + the offset of the tarp stop minus 1". Tighten the 3/8" bolt in the arm to temporary clamp the arm into place. Bolt the link arm to the motor arm and bottom arm using 3/8" x 2-1/4" bolts, 3/8" Nylon lock nuts, and 3/8" washers. Note the orientation of the Link Arm, the angled side is mounted on the Motor Arm Assembly. Slide the motor shaft into the roll-tube and mount the bottom arm onto the Offset Bracket using a 3/8" x

2-1/2" bolt, 3/8" Nylon lock nut, and 3/8" washers. Once Step 7 is complete, run the motor back and forth and confirm that the arms stop in the right place. If the arms are low when the tarp is fully open loosen the bottom 3/8" clamp bolt and lengthen the arm and if the arms are too high shorten the bottom arm. Make sure that the arms are high enough for the rear door latches to clear the arms when the door is opened. When the system is operating properly, drill a 3/8" hole through the small tunings and bolt together using a 3/8"x2" bolt, 3/8" Nylon lock nut, and 3/8" washers on both arms.

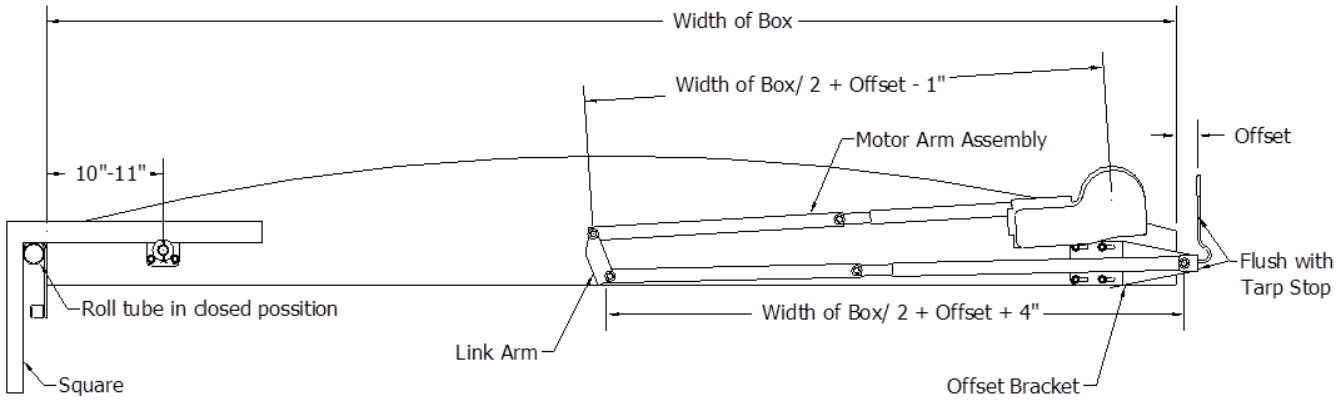

Step 4: Electric Motor Installation

Note: Apply the supplied Dielectric Lubricant to all wire connections when each wire is hooked up. The Dielectric Lubricant will help to prevent corrosion.

Procedure: The front beveled cable pulley is stamped FRONT STANDARD and the rear beveled pulley is stamped FRONT REVERSE (A). Slide the rear beveled pulley on the roll-tube. Slide the front beveled pulley on the front of the roll-tube. Slide the motor assembly into the rear of the roll-tube and attach the arm assembly into the offset bracket. Drill a 5/16" hole through the roll-tube and the predrilled hole in the motor shaft, approximately 1" from the bracket. Secure together with a 5/16"x2-1/4" hex bolt and jam nut. The 1/4"x3/8" set screws in the front and rear beveled pulleys are to be tightened in Step 4.

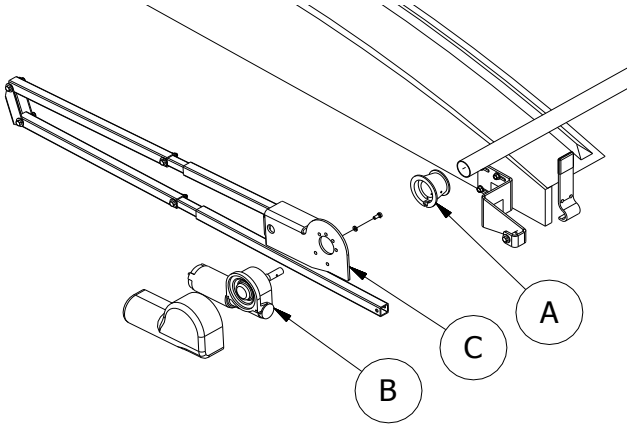

Step 5A: Rocker Switch Installation

Procedure: Mount the rocker switch in an obstruction free area inside the truck cab. Then mount the solenoid on the truck in the battery box or in a sealed enclosed box. Run #6 double strand wire from the solenoid along the truck frame to

Step 5A: Rocker Switch Installation Cont.

the rear box hinge point. The ends at the solenoid both get a black rubber boot and a #6-1/4" stud crimped on. Now run the wires along the rear to the passenger outside side of the box and up to the top. Leave a slight amount of slack at the offset bracket and continue running the wire along the pivot arm. Secure the wire to the pivot arms with the tie straps provided. Attach the wire to the truck with wire clips and 1/4"x1" self-tapping screws that are provided. Connect the wires to the motor posts. Run 14-3 wire from the solenoid to the rocker switch. At the switch side the wires get a 14G female ends crimped on and at the solenoid each wire gets a 14G female end except for the wire connected to the middle post of the switch gets a 14G-1/4" ring terminal crimped on to connect to the positive post of the solenoid. Follow wiring schematic below. Slide a red rubber boot onto the positive wire and a black rubber boot onto the negative wire. Then crimp two #6-1/4" ring terminal crimped to the ends. The wire with the red stripe will be the positive wire and will get bolted on the positive post marked (+) along with the black 14Ga wire running from the switch. The black wire or negative wire will be bolted onto the bottom negative post (-). Insert the 50A circuit breaker in line with the positive wire. Raise and lower the hoist to make sure that the wires are free from obstructions. Once everything is wired and working properly, secure the motor cover to the motor with the 2 self-tapping screws provided.

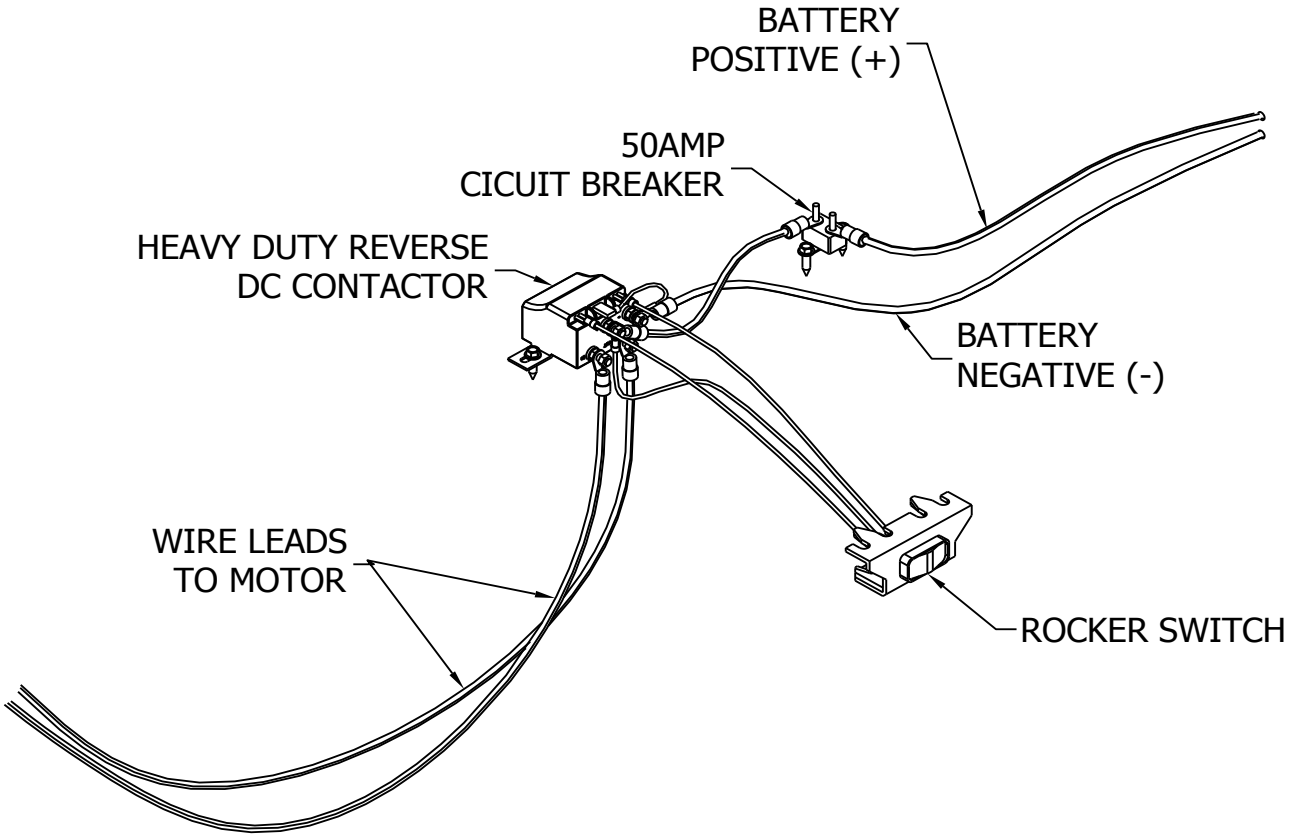

Step 5B: MIC210 Control Box Installation

Depending on the grain box, two different mounting brackets may be used. If the grain box already has a large 'U'-shaped bracket which houses air controls, use the basic plate. If not equipped with this 'U' –shaped bracket then the shielded bracket which mounts to the back side of the mud flap bracket should be used. The MIC210 Control Box mounting plate will be mounted to the box using the 3/8" bolts provided. Wire in the power wire and the electric tarp motor wires (if applicable) before securing the MIC210 Control Box to the mounting plate.

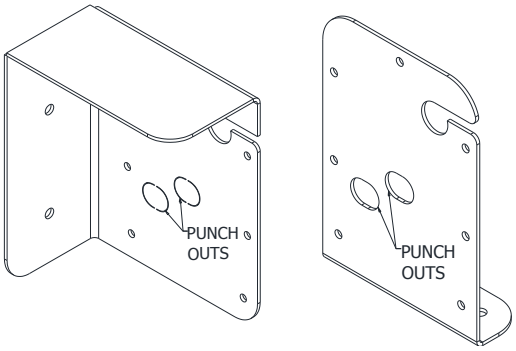

Shielded Mud Flap Bracket Mount **Basic Plate**

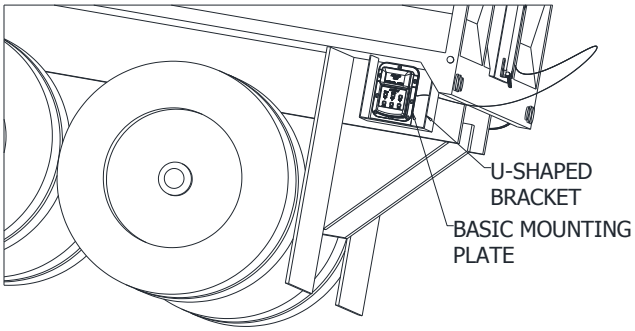

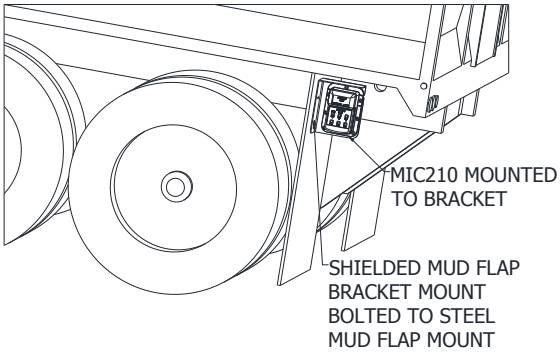

Step 5B: Wiring the MIC210 System on a grain truck equipped with an electric tarp

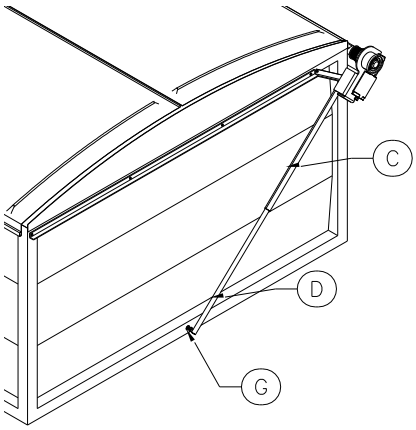

Run 6 AWG wire from the battery underneath the truck, along the frame to the MIC210 control box. Make sure the inline circuit breaker is connected to the positive wire near the battery, **but do not connect to the battery until all wire ends are connected correctly to refrain from shorting anything out**. Once the wires are installed and secured to the truck, thread the wires through the appropriate hole (described below) of the mounting plate coming in from behind the plate. Remove the punch outs with a chisel and hammer. Place a grommet in each of the slots to protect the wires. Run the #6 double strand wire from the MIC210 box along the truck frame to the rear box hinge point. Now run the wires along the box frame to the front box sill. Leave a slight amount of slack at point (G) and continue running the wire along the pivot arm. Secure the wire to the top pivot arm (I) with the tie straps provided. Attach the wire to the truck with the wire clips and 1/4"x1" self-tapping screws that are provided. Connect the wires to the motor posts. The ends at the MIC210 box and the motor all get a #6-1/4" stud crimped on. These motor wires thread through the middle hole on the

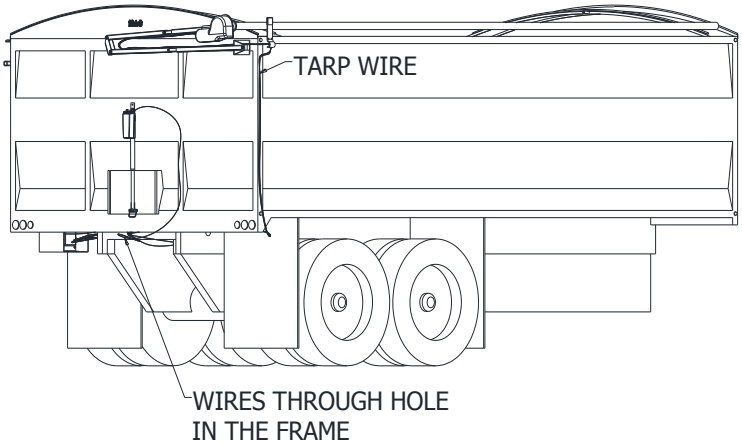

mounting plate. The incoming power wires thread through the bottom hole of the bracket. Make sure the grommets have been installed to protect the wire. The third hole at the top of the bracket is for the hoist and the Power Pro leads. Slide them into the top hole using the slot. The third grommet will need to be split using a pair of side cutters or a knife. Wrap the split grommet around the actuator and hoist leads. Then insert it into the top hole. Next, connect the power wires to the solenoid. The positive wire goes on the positive post (top left) of the solenoid. The negative wire goes on the negative post (top right) of the solenoid. Then, connect the tarp motor wires to the solenoid. These wires connect to the remaining bottom posts on the solenoid. It does not matter which wire goes where on these two posts. If they end up being backwards to the remote there is a very simple setting in the remote which can reverse them without having to physically switch the wires. Please see the R200 Remote instruction manual, Section 4.2.2. **There is a specific way in which the 6 AWG wires must be positioned in order to fit inside the MIC210 Control Box**. Please refer to the Diagram on the next page. Once all the wires are connected to the MIC210 box connect the wires to the battery to ensure everything works before carrying on to securing the box to the mounting plate.

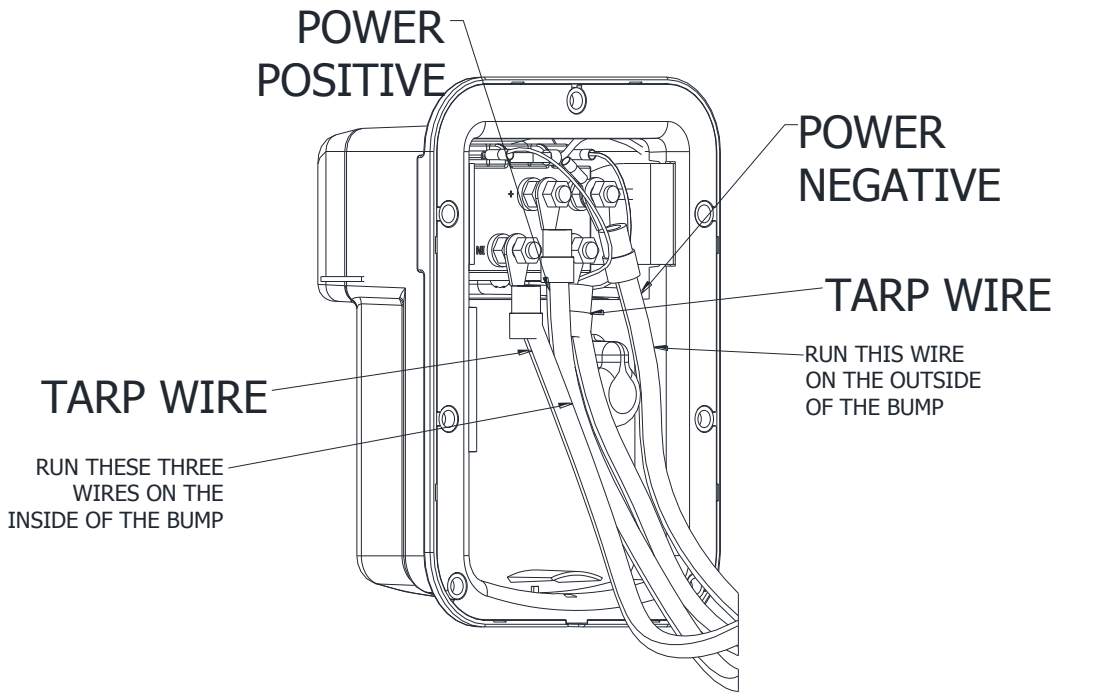

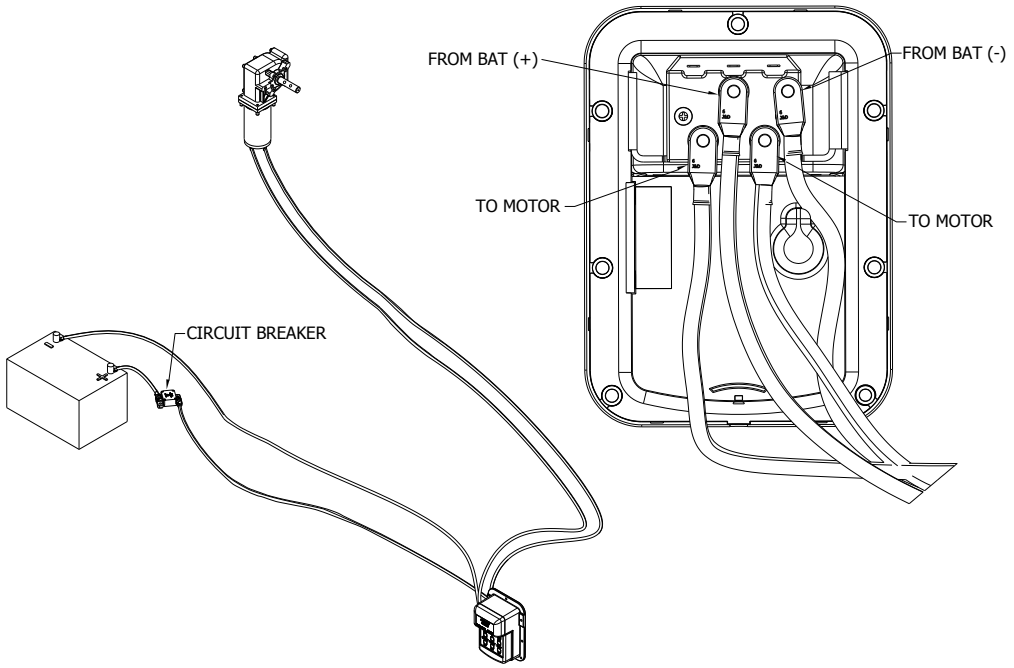

Securing MIC210 Control box to Mounting Plate

Start by mounting the control box and gasket to the mounting plate by using the bottom two holes in the control box, this will aid in holding everything in place before you install the back cover. Next make sure your wires are still remaining in the correct positions according to the diagram to refrain from pinching anything, install the back protective cover using the remaining five holes in the control box.

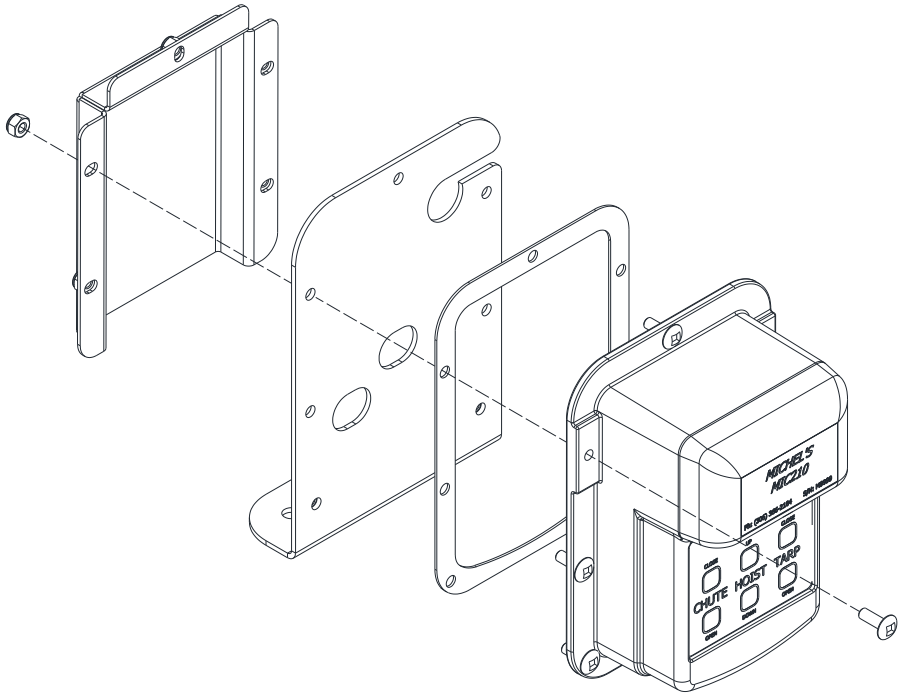

Step 6: Beveled Cable Pulley Installation & Tension Control Adjustment

Procedure: Roll the tarp to the open position. Installing cable onto rear beveled pulley: Pull the cable from the rear holdback system (O) towards the rear beveled pulley stamped FRONT REVERSE (B). Insert cable end into pulley slot and rotate beveled pulley 1-3/4 turns for an 8-1/2ft box or 2-1/4 turns for an 8ft box. Rotate the pulley from the underside of it on the large diameter. Properly position the beveled pulley on the roll-tube so that the nylon cable guide (P) on the holdback lines up with the small diameter on the pulley. Tighten the 1/4"x3/8" set screws (E) to hold the pulley in place.

Installing cable onto front beveled pulley: Pull the cable from the front holdback system towards the front beveled pulley stamped FRONT STANDARD. Repeat the rear beveled pulley procedure. Roll the tarp open and closed several times checking each time to make sure that the cable follows in the pulley grooves and the tarp rolls evenly. If the cable does not follow in the grooves, move the beveled pulley in or out until the correct position is achieved. If the tarp does not roll evenly, roll the tarp to the open position, loosen the 1/4"x3/8" set screws in the front and rear pulleys and increase the wrap. This will increase the tension. Do not allow the pulley to have less than one complete wrap of cable when the tarp is in the open position.

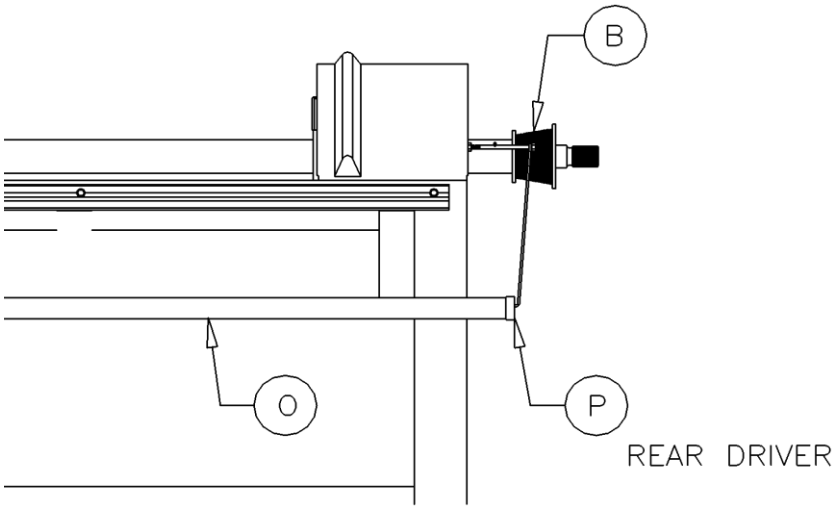

Step 7: Pivot Pipe Assembly and Installation

Procedure: Assemble the pivot pipe assembly by sliding the 1" PVC pipe (2) onto the Pivot Mounting Bracket (1). Followed by a 1" washer (4) and secured by a 3/16" x 2" cotter pin (3). The pivot pipe bracket mounts level with the top of the roll tube when the roll tube is in the Closed Position. Use a square and the side of the box to make the top of the roll tube and the plastic pivot tube level. The center of the plastic pivot should be mounted between 10"-11" in from the side of the box. Drill and screw the mounting plate with the slots vertical so fine adjusting can be done. When the tarp is both fully closed, the arms should be under the hood line and above the doors out of the way. If the arms are low when fully closed raise the pivot point. If the arms are high lower the pivot point.

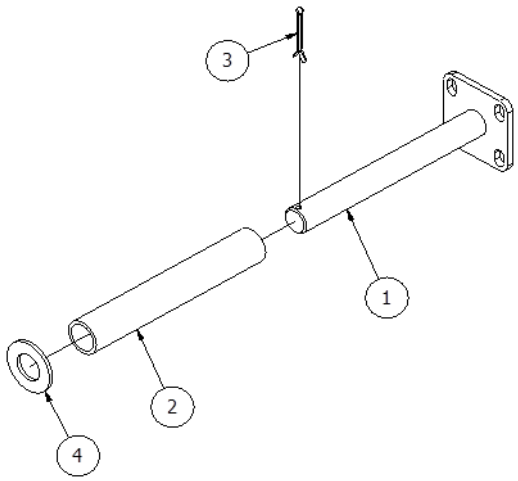

Optional Manual Override

Step 1: Remove the motor cover and disconnect the motor from the power supply.

Step 2: Remove the plastic cap covering the manual input shaft. **Do not use the manual override when the motor is running or the motor is connected to the power supply.**

Step 3: Using a 1/2in socket and a speed ratchet or impact driver, simply slide onto the manual input shaft and drive the gearbox as needed. Keep in mind that 90 revolutions of input will result in one revolution of output.

Step 4: Remove the driver and re-install the plastic cap.

Warranty:

Michel's Industries warrants their products for a period of one year from date of purchase. Any parts returned to Michel's Industries LTD. Will be shipped prepaid and will be returned F.O.B. St.Gregor, Sk. Canada. We will not assume responsibility for shipping, labor or travel expenses. Please Note: We reserve the right to make improvements; therefore specifications are subject to change without notice.

FOR INSTALLATION ASSISTANCE PLEASE CALL (306) 366-2184